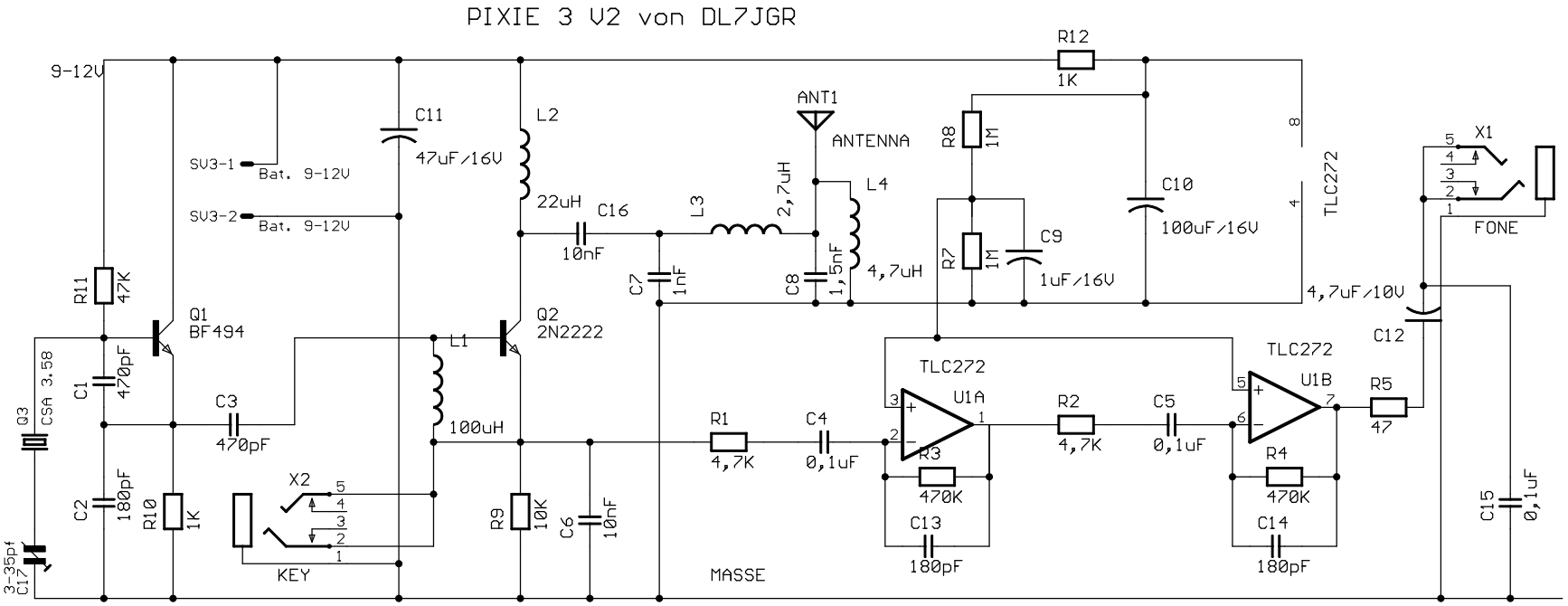
PIXIE 3 V2 von DL7JGR
9-12V
R12
1K
ANT1
ANTENNA
R8
1M
C11
47uF/16V
L2
22uH
C16
10nF
L3
2,7uH
L4
4,7uH
C8
1,5nF
C7
1nF
R7
1M
C9
1uF/16V
C10
100uF/16V
TLC272
X1
FONE
SV3-1
Bat. 9-12V
SV3-2
Bat. 9-12V
R11
47K
Q1
BF494
Q2
2N2222
L1
100uH
C1
470pF
C3
470pF
Q3
CSA 3.58
C2
180pF
R10
1K
X2
KEY
R9
10K
C6
10nF
R1
4,7K
C4
0,1uF
TLC272
U1A
R3
470K
C13
180pF
R2
4,7K
C5
0,1uF
TLC272
U1B
R4
470K
C14
180pF
R5
47
4,7uF/10V
C12
C15
0,1uF
3-35pf
C17
MASSE